Wastewater characteristics

Chapter 2-3

BIOLOGICAL CHARACTERISTICS

- Because of the fundamental role played by bacteria and other microorganisms in the decomposition and stabilization of organic matter (waste), control of diseases caused by pathogenic organisms is important

- The purpose of this section is to introduce
  - Microorganisms found in wastewater
  - Pathogenic microorganisms associated with human disease
  - The use of indicator organisms
  - The methods and techniques for enumeration of bacteria
  - The method of enumerating viruses
  - Newly recognized or emerging organisms

- Microorganisms found in wastewater
  - Bacteria, fungi, algae, protozoa, plants and animals, viruses
  - General classification (prokaryotes vs. eukaryotes)
    - A function of their genetic information and cell complexity
    - Prokaryotes (simple cell structure): bacteria, blue-green algae(cyanobacter), archaea
      - Archaea: grow under extreme conditions of temp. and salinity. Include methane-producing bacteria
    - Eukaryotes (much more complex and contain plants and animals) in a single-celled organisms: protozoa, fungi, and green algae

Cell characteristic	Prokaryote	Eukaryote (Eukarya)
Phylogenetic group	Bacteria, blue-green algae (cyanobacter), archaea	Single cell: algae, fungi, protozoan; multicell: plants, animals
Size[b]	Small, 0.2–3.0 μm	2–100 μm for single-cell organisms
Cell wall	Composed of peptidoglycan (bacteria), other polysaccharides, protein, glycoprotein (archaea)	Absent in animals and most protozoan; present in plants, algae, fungi: usually polysaccharide
Nuclear structure:		
Nuclear membrane	Absent	Present
DNA	Single molecular, plasmids	Several chromosomes
Internal membranes	Simple, limited	Complex, endoplasmic reticulum, golgi, mitochondria; several present
Membrane organelles	Absent	Several present
Photosynthetic pigments	In internal membranes; chloroplasts absent	In chloroplasts
Respiratory system	Part of cytoplasmic membrane	Mitochondria

(Matcalf & Eddy, 2004)

- Viruses (intracellular parasites)
  - require a host cell to support their growth
  - they are unable to reproduce outside of a host cell, although they contain the genetic information (DNA or RNA) needed to replicate themselves
  - Bacteriophage: viruses that infect bacteria
  - Parasites: ectoparasites (live on the surface of host), endoparasites (live internally within host)

- General description
  - Microorganisms has the ability to form resistant form
  - Endospore (formed within the cell): contains all of the information for reproduction coated with several layers of proteins
  - Extremely resistant to heat and disinfecting chemcials
  - Become viable in a suitable environment: activation, germination, and outgrowth

Organism	Description
Bacteria	Bacteria are single-cell prokaryotic organisms. The interior of the cell contains a colloidal suspension of proteins, carbohydrates, and other complex organic compounds, called the cytoplasm. The cytoplasmic area contains ribonucleic acid (RNA), whose major role is in the synthesis of proteins. Also within the cytoplasm is deoxyribonucleic acid (DNA). DNA contains all the information necessary for the reproduction of all the cell components and may be considered to be the blueprint of the cell. Their usual mode of reproduction is by binary fission, although some species reproduce sexually or by budding
Archaea	Similar to bacteria in size and basic cell components. Their cell wall, cell material, and RNA composition are different. Important in anaerobic processes and also found under extreme conditions of temperature and chemical composition
Fungi/yeast	Fungi are multicellular, nonphotosynthetic, heterotrophic eukaryotes. Most fungi are either strict or facultative aerobes which reproduce sexually or asexually, by fission, budding, or spore formation. Molds, or "true fungi," produce microscopic units (hyphae), which collectively form a filamentous mass called the mycelium. Yeasts are fungi that cannot form a mycelium and are therefore unicellular. Fungi have the ability to grow under low-moisture, low-nitrogen conditions and can tolerate an environment with a relatively low pH. The ability of the fungi to survive under low-pH and nitrogen-limiting conditions, coupled with their ability to degrade cellulose, makes them very important in the composting of sludge
Protozoa	Protozoa are motile, microscopic eukaryotes that are usually single cells. The majority of protozoa are aerobic heterotrophs, some are aerotolerant anaerobes, and a few are anaerobic. Protozoa are generally an order of magnitude larger than bacteria and often consume bacteria as an energy source. In effect, the protozoa act as polishers of the effluents from biological waste-treatment processes by consuming bacteria and particulate organic matter
Rotifers	Rotifers are aerobic heterotrophic animal eukaryotes. The name is derived from the fact that they have two sets of rotating cilia on their head which are used for motility and capturing food. Rotifers are very effective in consuming dispersed and flocculated bacteria and small particles of organic matter. Their presence in an effluent indicates a highly efficient aerobic biological purification process
Algae	Algae are unicellular or multicellular, autotrophic, photosynthetic eukaryotes. They are of importance in biological treatment processes. In wastewater-treatment lagoons, the ability of algae to produce oxygen by photosynthesis is vital to the ecology of the water environment. The blue-green alga cyanobacter is a prokaryotic organism
Viruses	Viruses are composed of a nucleic acid core (either DNA or RNA) surrounded by an outer shell of protein called a capsid. Viruses are obligate intracellular parasites that multiply only within a host cell, where they redirect the cell's biochemical system to reproduce themselves. Viruses can also exist in an extracellular state in which the virus particle (known as a viron) is metabolically inert. Bacteriophages are viruses that infect bacteria as the host; they have not been implicated in human infections

(Matcalf & Eddy, 2004)

- Pathogenic organisms
  - Those found in wastewater may be excreted by **human beings** who are infected with disease or **animals** who are carriers of a particular infectious disease
  - Classification: bacteria, protozoa, helminths, and viruses
  - Bacteria pathogenic organisms
    - cause diseases of gastrointestinal tract: typhoid fever (Salmonella), dysentery (Shigella), diarrhea, and cholera (Vibrio)
    - Domestic wastewater contains a wide variety of nonpathogenic and pathogenic bacteria
    - Commonly, gram-negative bacteria considered as nonpathogenic, but unknown waterborne gastroenteritis is frequently reported
      - Escherichia coli and certain strains of Pseudomona

- Protozoa pathogenic organisms
  - A significant impact on individuals with compromised immune system, including very young children, the elderly, persons undergoing treatment for cancer, etc
  - Symptoms: severe diarrhea, stomach cramps, nausea, and vomiting lasting for extended periods
  - Cryptosporidium parvum, Cyclospora, Giardia lamblia
  - Infection is caused by the ingestion of oocysts and cysts, the resistant form of protozoa.
  - Chlorine have not been proved for their destruction, but UV is extremely effective in the inactivation of oocysts and cysts

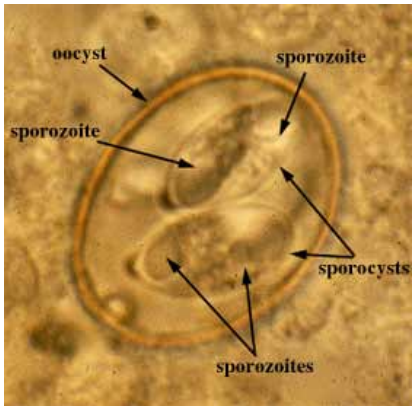

(http://diafragma.eu)

- Helminths
  - It is used to describe worms collectively
  - Classification: Nematoda (roundworms), Platy-helminthes (flatworms), Annelida (segmented worms)
  - The most infections are associated with roundworms and flatworms
  - The presented Helminth eggs in wastewater caused infections
  - Eggs are removed by sedimentation, filtration, and stabilization
  - Chlorine and anaerobic digestion cannot inactivate eggs
  - Concerning about these eggs is needed in biosoilds management







(www.quia.com)

- Viruses
  - More than 100 different enteric viruses capable of infection or disease excreted by human
  - Multiply in intestinal tract and are leased
  - The most enteric viruses: enteroviruses, Norwalk viruses, rotaviruses, reoviruses, caliciviruses, adenoviruses, and hepatitis A virus
    - Norwalk viruses, rotavirus: a major waterborne pathogens caused diarrheal disease
    - Reoviruses, adenoviruses: caused respiratory illness, gastroenteritis, and eye infections

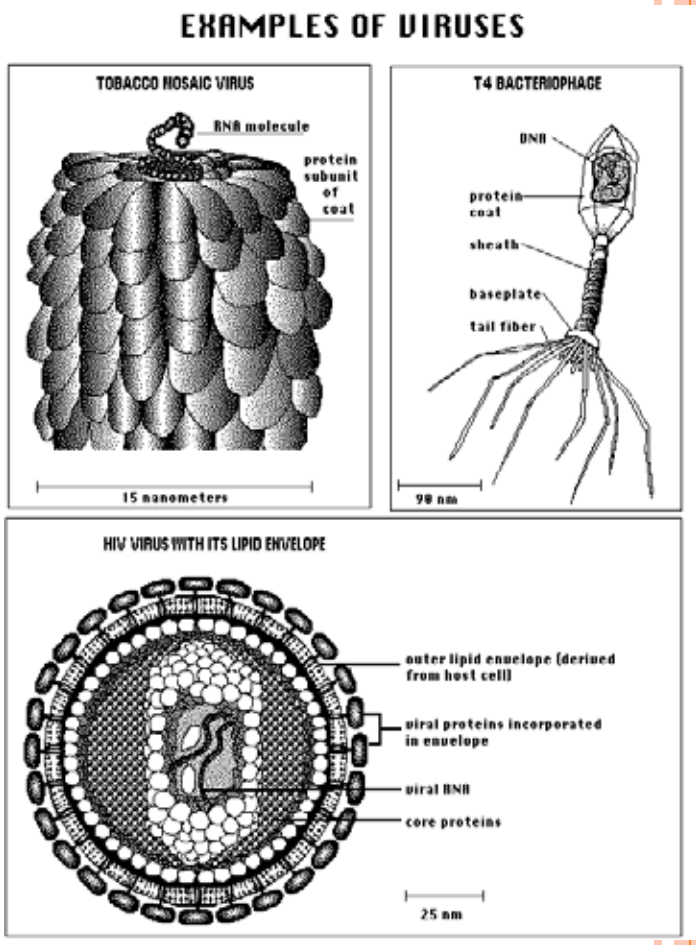

(www.gene,com)

- The use of indicator organisms
  - Because pathogens are usually few and difficult to isolate and identity, microorganisms are commonly used as surrogate (indicator) for target pathogens
  - Even though the characteristics of ideal indicator organisms were suggested, the ideal indicator organisms have not been founded yet
  - Bacterial indicators: Coliform bacteria (rod-shaped bacteria)
    - **Total coliform**: gram-negative that ferment lactose in 24 to 48 h at 35±0.5 ^{o}C. However, it is not for only *Escherichia coli (E. coli)*, but also other coliforms
    - **Fecal coliform**: 24 h at 44.5±0.2 ^{o}C
    - **Test for *Escherichia coli***: applied the elevated temperature and a specific growth medium (MUG). A positive response with the presence of bright blue fluorescence
  - Other indicator organisms
    - Coliforms are adequate for pathogenic bacteria/viruses, but not for protozoa
    - **Bacteriophages** for enteric viruses (especially, bacteriophages that infect *E. coli* are known as **coliphages**)

- Enumeration and identification of bacteria
  - Direct microscopic count
  - Pour and spread plate counts
  - Membrane-filter technique
  - Multiple-tube fermentation
  - Presence-absence test (P-A test)
  - Heterotrophic plate count (HPC)
  - Techniques for identification of specific bacteria and protozoa

- Direct count: total count
  - ü Difficult to differentiate between live and dead cell
  - ü Stain is often used, but its accuracy has been questioned

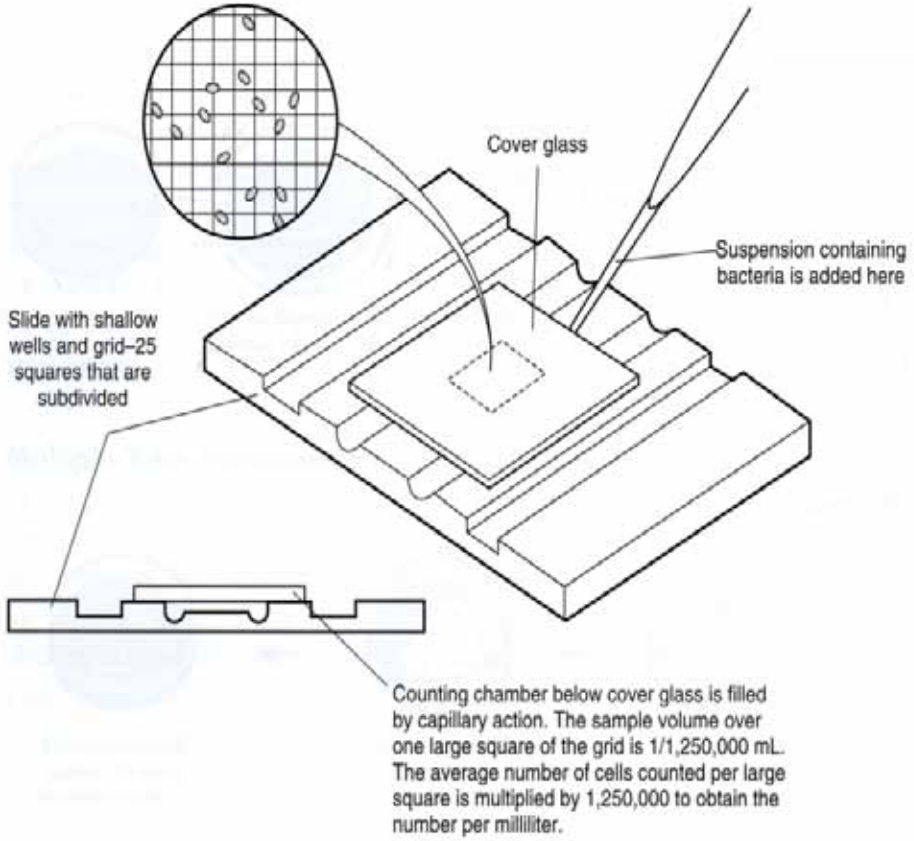

(Matcalf & Eddy, 2004)

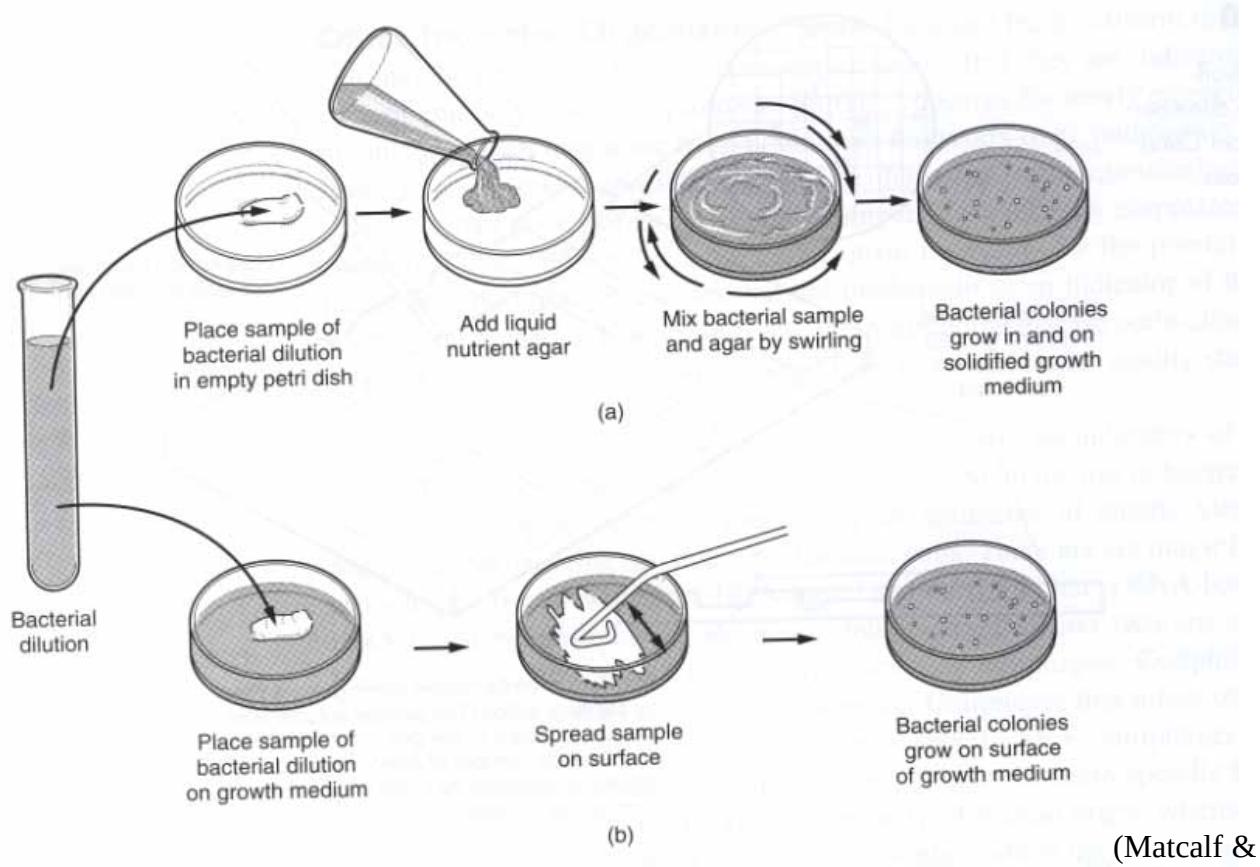

(Matcalf & Eddy, 2004)

- Pour and spread plate counts
  - ü It is reported as colony-forming units (cfu) per unit volume of sample (typically cfu/mL)
  - ü The assumption, which each bacteria formed each colony, is not accepted

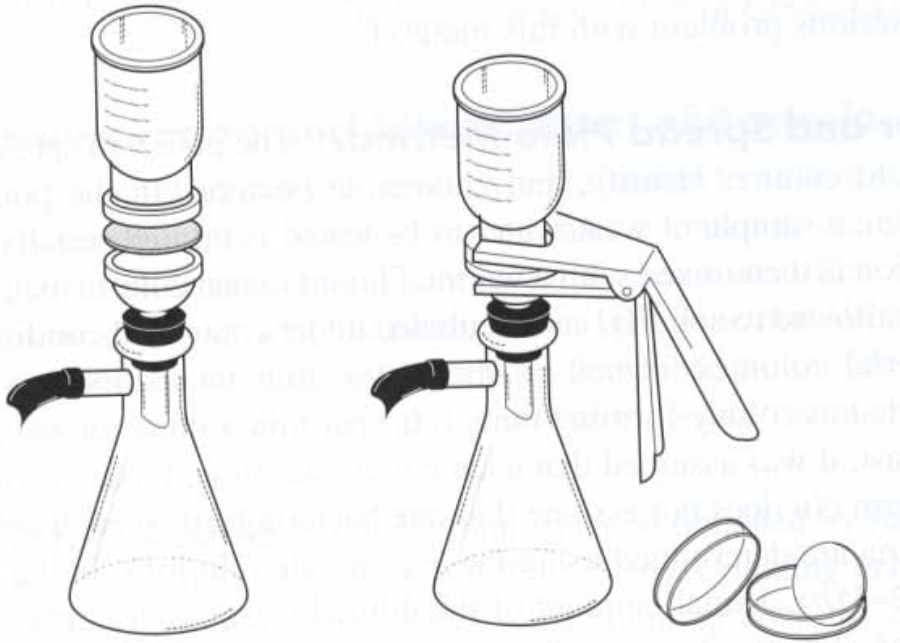

(Matcalf & Eddy, 2004)

- Membrane-filter technique
  - A known volume of water sample passed through a membrane filter (pore size: typically 0.45 *u*m)
  - The filter is placed, right side up, in petri-dish with agar. After incubation, colonies are counted and the concentrations are determined
  - It is faster than the technique called multiple-tube fermentation, and it is generally used in field

- Multiple tube fermentation
  - used the principal of dilution to extinction
  - a statistical estimate of concentration
  - Units: most probable number per 100 mL (MPN/100 mL)
  - Calculation (Ex. 2-13): Poisson distribution, Thomas equation, and MPN table (Appendix E in textbook)

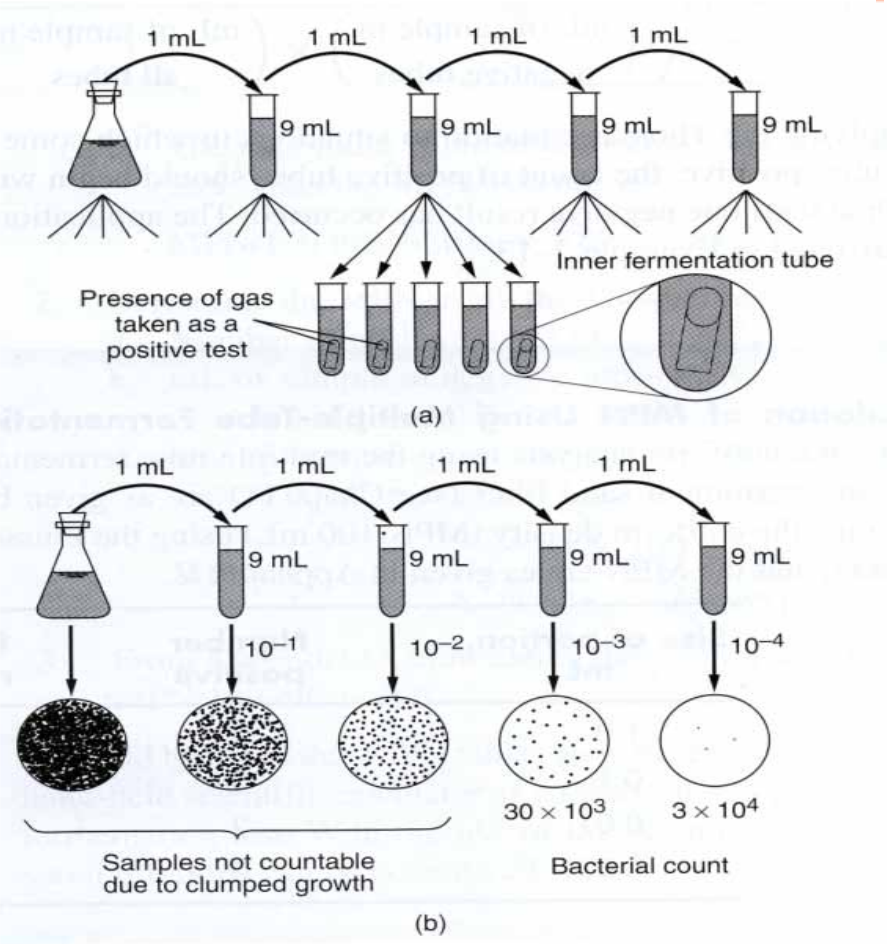

(Matcalf & Eddy, 2004)

- Presence-absence test (P-A test)
  - The modification of multiple-tube fermentation technique
  - If a distinct yellow color forms, coliforms are present
- Heterotrophic plate count (HPC)
  - A procedure for estimating the number of live heterotrophic bacteria
  - determined using 1) pour plate method, 2) spread plate method, or 3) membrane filter method
- Identification of specific bacteria and protozoa
  - Fluorescent in situ hybridization (FISH)
  - For more information, see Figure 2-36

- Enumeration and identification of viruses
  - Virus particles are too small to see with a light microscope
  - Electron or transmission scanning microscope can be used, but the process of preparing the sample for examination is costly and time consuming
  - **Enteric viruses**
    - more than 100 viral entities associated with human feces
    - usual size of viruses : 20 – 80 nm
    - Methods
      - Using filter: one gallon of wastewater or 1000 gallon of drinking water passed through filters (electropositive in charge) at the rate of approximately 1 gal/min, then absorbed viruses are eluted
      - Virus assay (the plaque assay): performed by inoculating sample onto monolayers of cultured cell (tissue culture, mostly buffalo green monkey kidney (GBMK) cell). If viruses are present, they grow and destroy the host cell

- Bacteriophage
  - viruses that infect bacterial cells
  - Coliphage: viruses that infect many subspecies of *E.coli*
  - These phages are consistently present in wastewater
  - Determined by the mixing the various dilution of phage sample with large numbers of host bacteria. After incubation, the bacteria will grow to large number ('lawn'). As phages develop, they will lyse infected bacteria, forming plagues in the 'lawn'.
  - Also, MPN method can be used
- Polymerase chain reaction (PCR)
  - Rapid detection of potential pathogenic microorganisms
  - Using the amplification of the DNA with cell fragment, primer
  - *Primer* triggers the production of many copies of the microorganism DNA
  - Also, the identification of viruses only contain RNA, RNA is converted to DNA with enzyme, and it is called RT-PCR

- New and reemerging microorganisms
  - Even though a number of endemic contagious diseases had been controlled and eliminated, new diseases-causing organisms continuously has been identified
  - Legionella in wastewater and reclaimed wastewater (Now, it is believed to be spread by inhalation of contaminated water vapor)
  - Also, reemerging diseases-causing organisms was reported in many other parts of the world
  - Therefore, the concerns for presently well-known disease organisms including those new and reemerging organisms must remain the primary objective of wastewater management